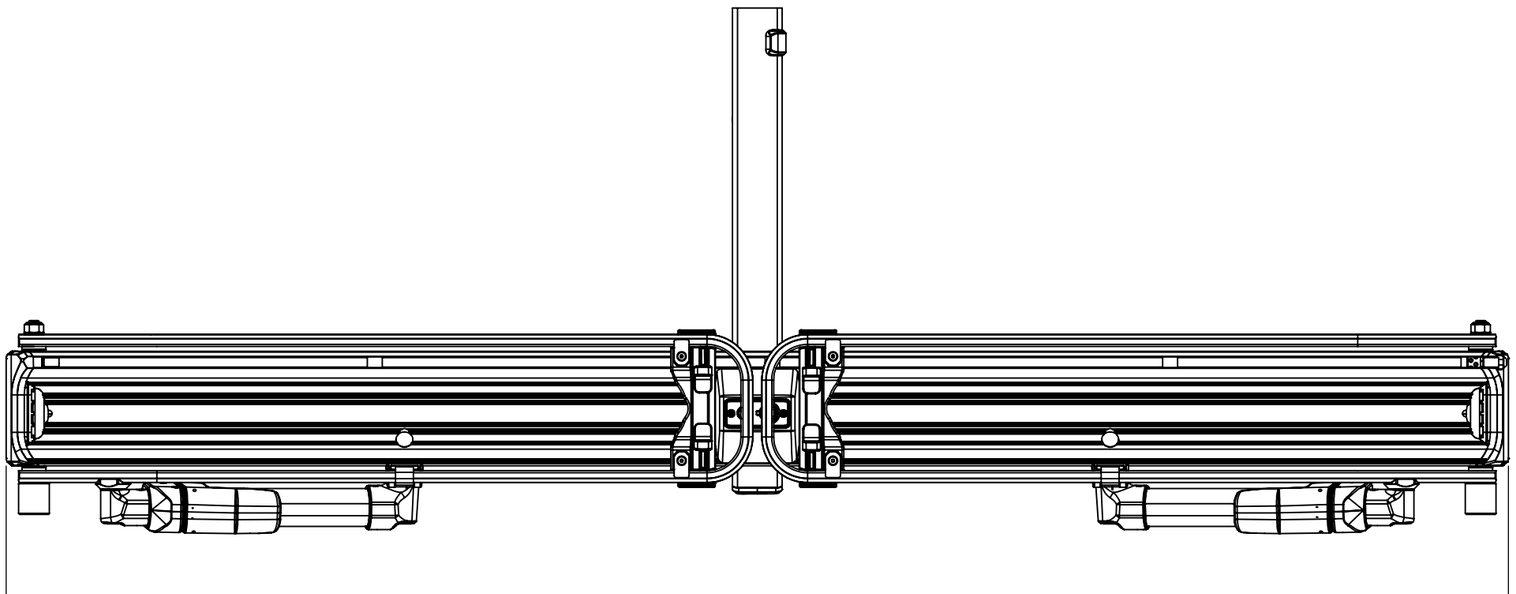
59 1/2"

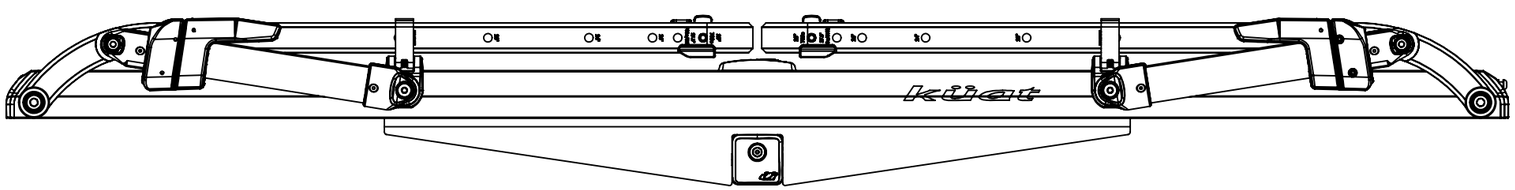
kiiet

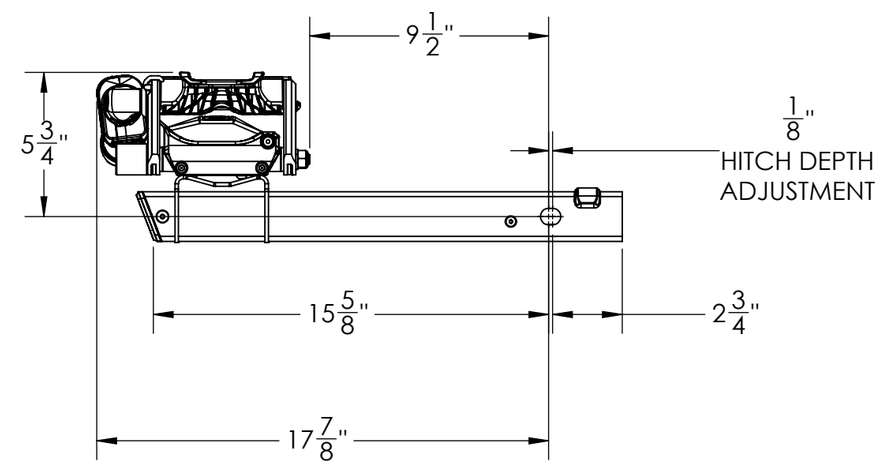
9 1/2"
5 3/4"
1/8"
HITCH DEPTH
ADJUSTMENT
15 5/8"
2 3/4"
17 7/8"